Product Information

FIASTED - Teddy Bear Activity Station

BS EN 1176 - Designed to British & European Standards

MATERIALS

Panels - Two Colour XDeco High Density Polyethylene (HDPE)
Windows - Shatterproof polycarbonate
Post - Extruded aluminium with powder coat finish

SUPPLY METHOD

Panels - Pre-assembled with post slot fixings
Post - Supplied seperately

DIMENSIONS

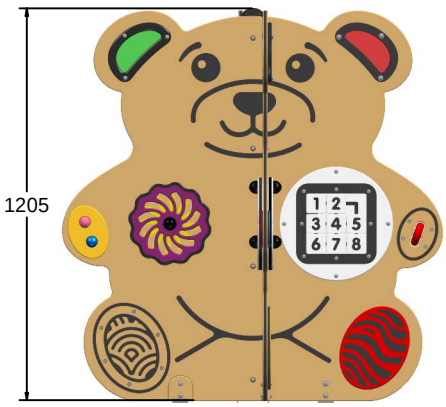

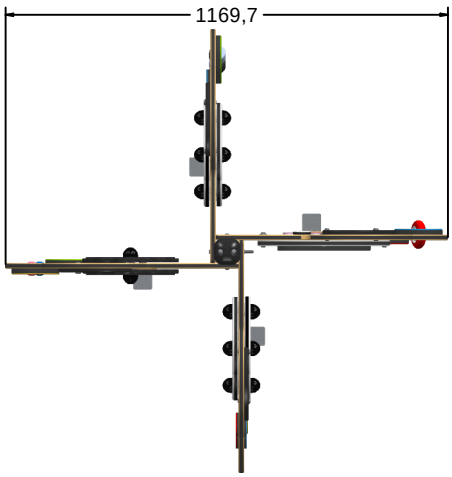

TECHNICAL

Age Range:	2+ Years
Largest Part:	1169.7 x 1214.7 x 1169.7mm
Total Weight:	46.5 kg
Surfacing :	N/A

IMPORTANT: you must specify the colour option you require at the time of order if it is different from the colour listed/shown above, requirements are subject to availability at the time of order

Fahr Industries Ltd
Spitfire Road, Old Sarum,
Salisbury, Wiltshire, SP4 6GB, UK

© 2025 Fahr Industries Ltd
These designs and content belong to Fahr Industries Ltd and are not to be reproduced in any way or by any means without written permission

Tel: +44 (0)1722 349793
Email: sales@fahr-industries.com
Web: www.fahr-industries.com

Product Information

FIASTED - Teddy Bear Activity Station

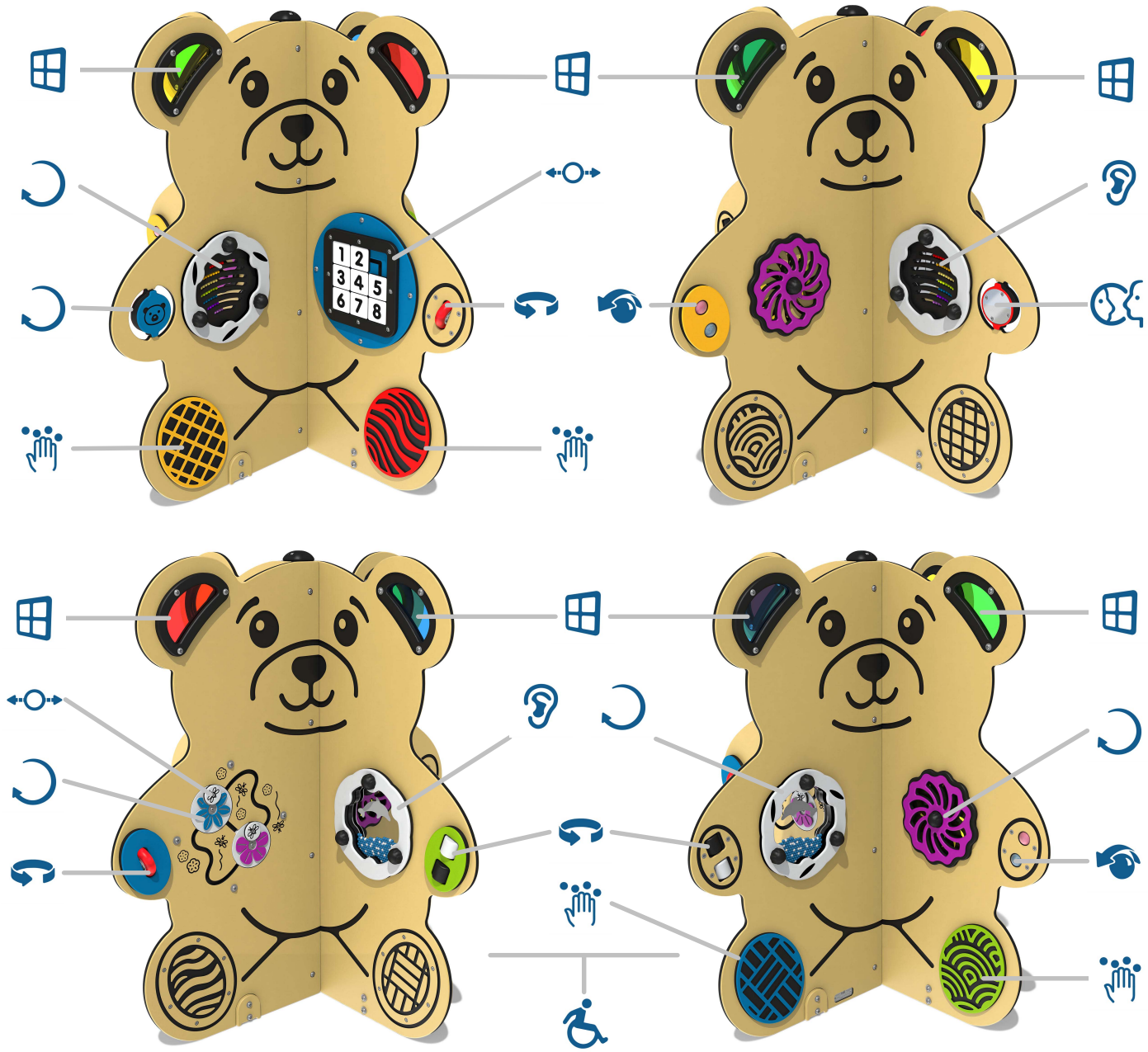

FEATURES

- **ROTATE** - Variety of different spinners
- **INCLUSIVE** - Activities positioned at easily accessible heights
- **FLIP** - Roller pixels and sparkling spinners
- **MIRROR** - Reflective spinner
- **SLIDERS** - Sliding Bee Counters
- **ROLLER BALLS** - Pink & Blue roller balls
- **SOUND** - Swishing ball bearings
- **WINDOW** - Multiple coloured window ears
- **TACTILE** - Variety of sensory plant-on feet

IMPORTANT: you must specify the colour option you require at the time of order if it is different from the colour listed/shown above, requirements are subject to availability at the time of order

Fahr Industries Ltd
Spitfire Road, Old Sarum,
Salisbury, Wiltshire, SP4 6GB, UK

© 2025 Fahr Industries Ltd
These designs and content belong to Fahr Industries Ltd and are not to be reproduced in any way or by any means without written permission

Tel: +44 (0)1722 349793
Email: sales@fahr-industries.com
Web: www.fahr-industries.com